User Manual Grenton Switch+Socket

MFP-003-T-0x

Grenton Switch+Socket is a combination of a minimalist switch referring to the retro style (lever system) and an electrical socket, featuring frames made of glass, mounted in standard fi60 cans. Grenton Switch is directly connected to the Grenton system bus and features a built-in temperature sensor.

1. Technical Data

Switch bus power supply	$24V_{dc}$
Switch maximum power consumption	0,1W
Switch maximum current consumption	4mA (for $24V_{dc}$)
Switch maximum connector wire cross section	$0,8mm^2$
Built-in temperature sensor	DS18B20
Number of additionally supported 1-Wire sensors	1
Socket maximum voltage	$250V_{ac}$
Socket maximum current	16A
Socket connector wire cross section	$1,5$ to $2,5mm^2$
Fixing	Flush mounted
Dimensions (H/W/D)	90/173/20mm - surface-mounted part, 33mm - depth in the can
Operating temperature range	0 to +45°C

2. Wiring Diagram

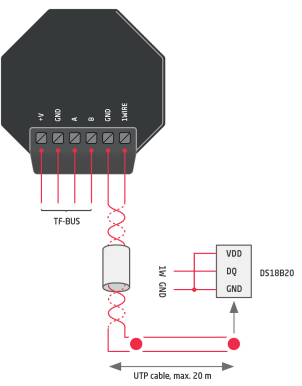

+V	Bus power supply
GND	GND for +V power supply
A	Signal output A
B	Signal output B
GND	GND for 1-Wire
1WIRE	1-Wire input

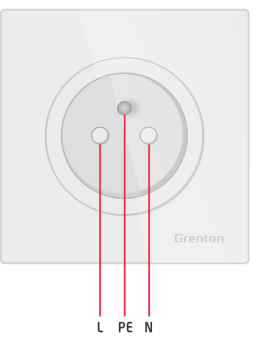

L	Phase conductor
PE	Protective conductor
N	Neutral conductor

3. Warnings and Cautionary Statements

ATTENTION !

- Before proceeding with the assembly, read the installation schematics and full instructions available at www.grenton.com. Failure to follow the guidelines contained in the instructions and other requirements of due care valid as a result of the nature of the equipment (device) may be dangerous to life / health, damage the device or installation to which it is connected, damage other property or violate other applicable regulations. The manufacturer of the device, Grenton Sp. z o. o. does not bear any responsibility for the damage (property and non-property related) resulting from the assembly and / or use of the equipment not in accordance with the instructions and / or due diligence in handling the equipment (device).
- Device power supply, permissible load or other characteristic parameters have to be in accordance with the device specification, described in particular in the "Technical data" section.
- The product is not intended for children and animals.
- If you have technical questions or comments about the device operation, contact Grenton Technical Support.
- Answers to frequently asked questions can be found at: www.support.grenton.pl

DANGER !

- Danger to life caused by electric current!
- The components of the installation (individual devices) are designed to work in a home electrical installation or directly in its vicinity. Incorrect connection or use may cause a fire or electric shock.
- All work related to the installation of the device, in particular works involving interference in the electrical installation, may be performed only by a person with appropriate qualifications or licences.
- When installing the device, make sure that the power supply voltage is disconnected from the circuit in which the device is connected or near which the assembly takes place.

4. CE Marking

The manufacturer declares that the device is in full compliance with the requirements of EU legislation that includes the directives of a new approach appropriate for this equipment. In particular, Grenton Sp. z o. o. declares that the device fulfills the requirements on safety, specified by law, and that it conforms to the national regulations that implement the appropriate directives: The Directive on the electromagnetic compatibility (EMC - 2014/30/UE) and the Directive on the limitation of the use of specific substances in electrical and electronic equipment (RoHS II - 2011/65/UE).

5. Warranty

Warranty available at: www.grenton.com/warranty

6. Manufacturer Contact Details

Grenton Sp. z o.o.
ul. Na Wierzchowinach 3
30-222 Kraków, Poland
www.grenton.com